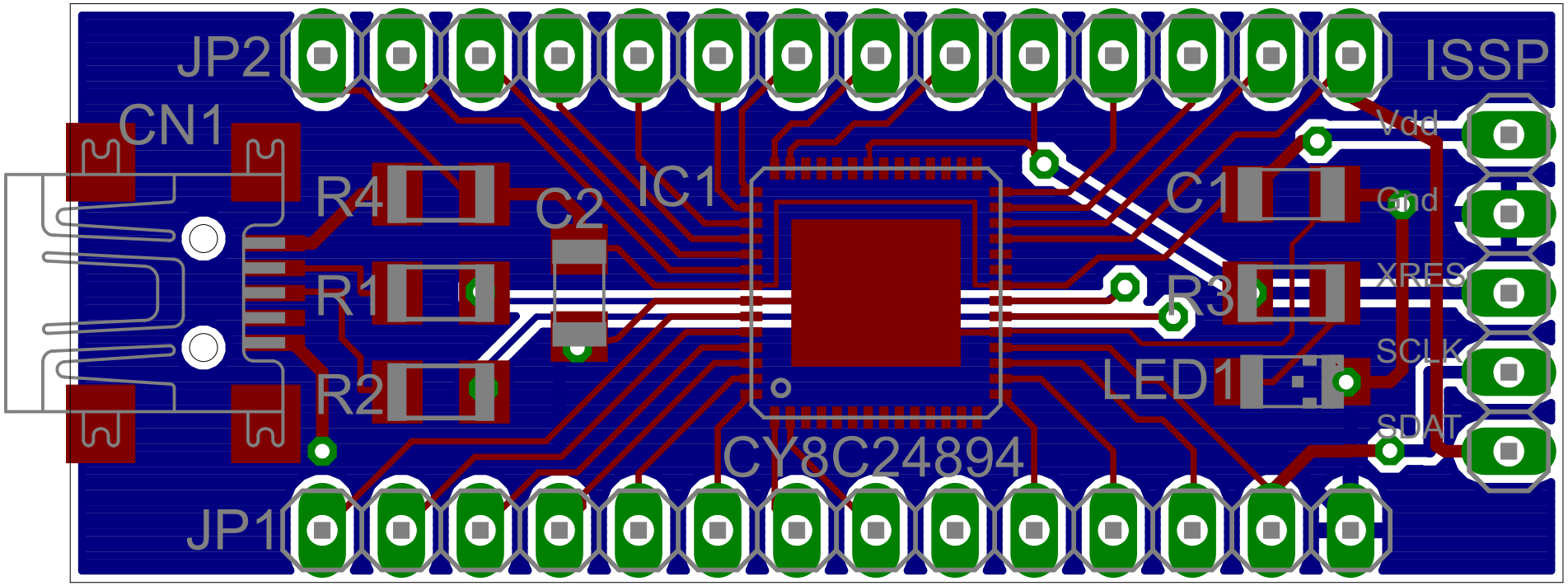
JP2
ISSP
CN1
Vdd
R4
C2
IC1
C1
Gnd
R1
R3
XRES
SCLK
LED1
R2
SDAT
CY8C24894
JP1

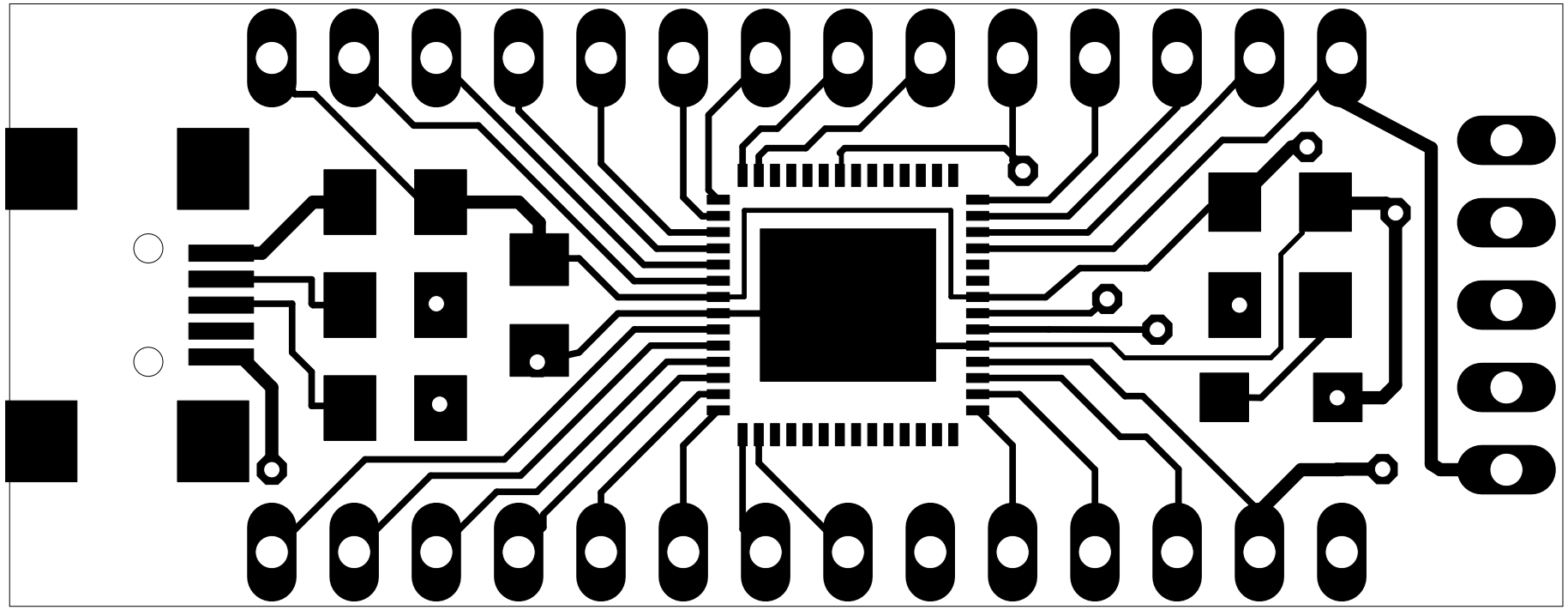

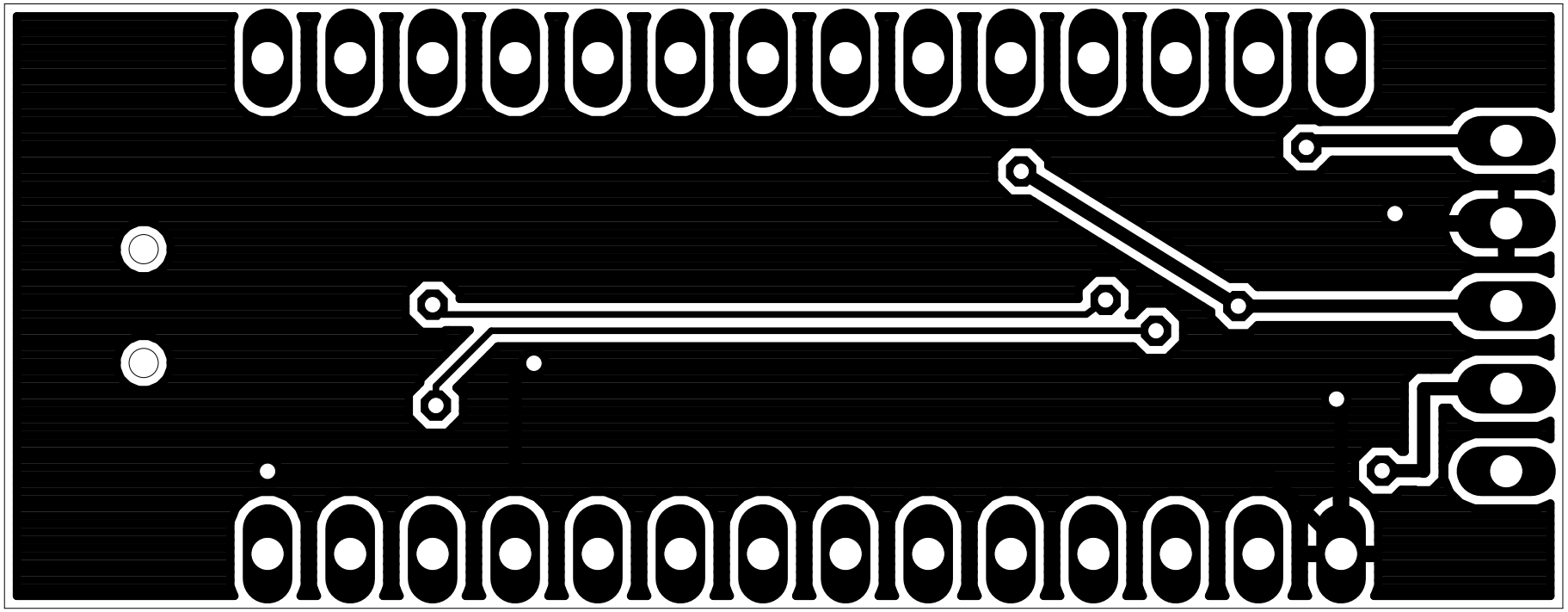

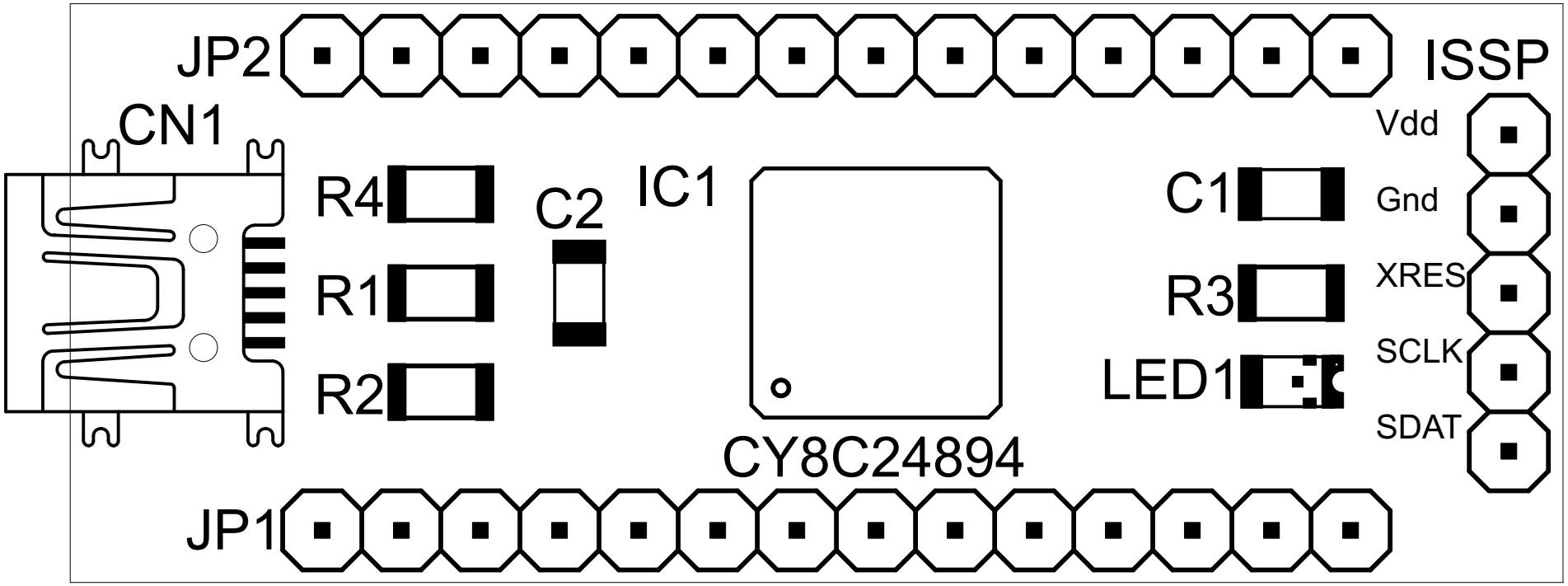
JP2
ISSP
CN1
Vdd
R4
C2
IC1
C1
Gnd
R1
R3
XRES
SCLK
LED1
R2
SDAT
CY8C24894
JP1

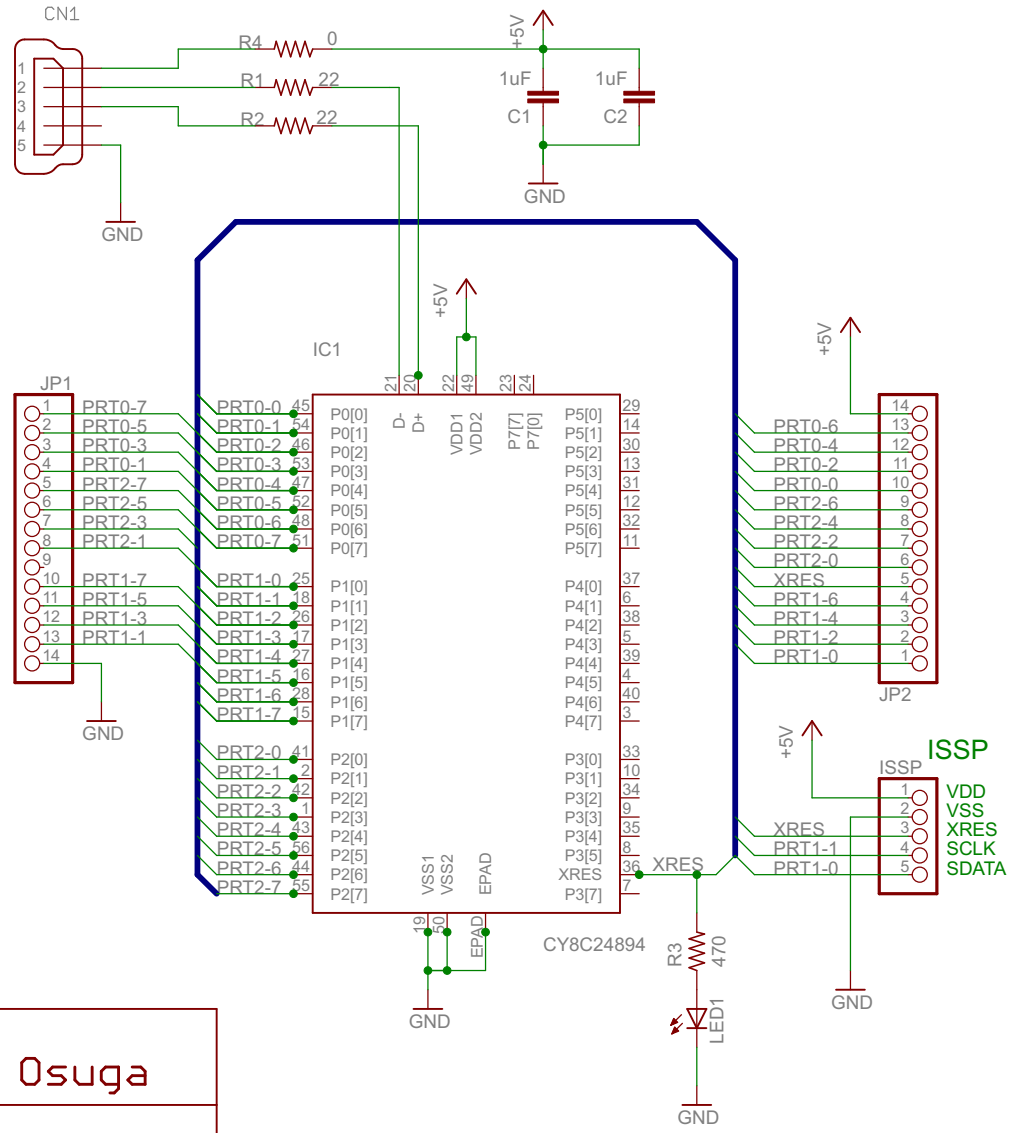

Author:ITcorp. Masaru Osuga

TITLE: USB2IO[CY8C24894]

Document Number:

REV: A

Date: 2008/08/13 15:35:54

Sheet: 1/1